HSF Pb RoHS

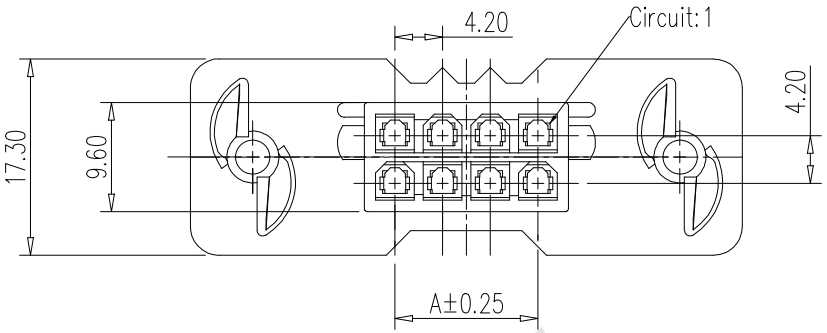

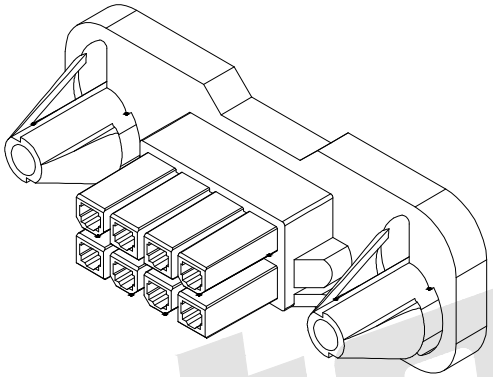

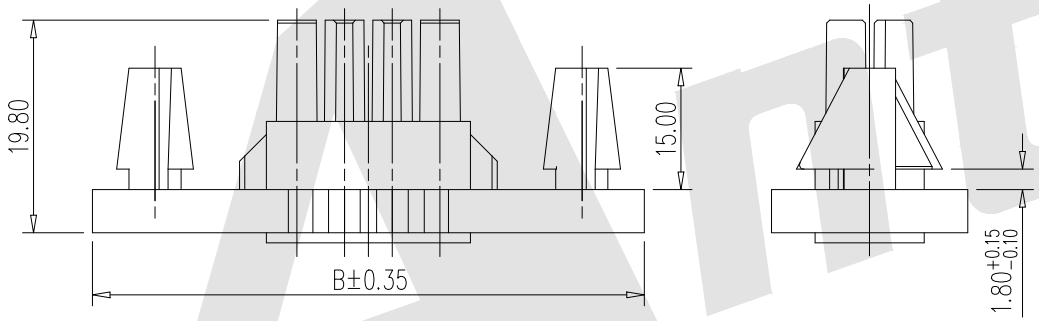

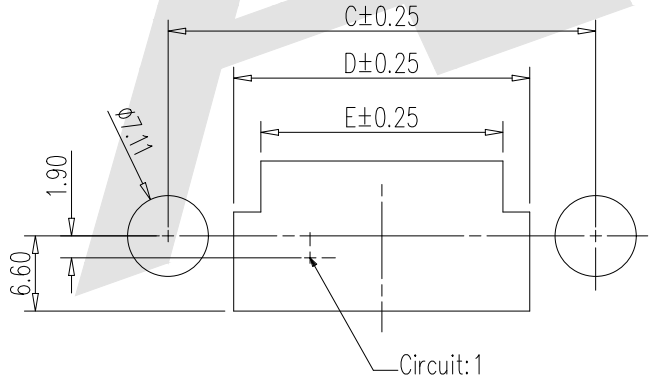

PCB LAYOUT

SPECIFICATIONS:
Current rating: 7A AC,DC
Voltage rating: 250V AC,DC
Temperature range: -40°C~+130°C
Contact resistance: 10mΩ Max.
Insulation resistance: 1000MΩ Min.
Withstanding Voltage: 1500V AC/minute
Material: Nylon UL94V-0
Terminal/Housing Retention Force
Requires: 6.5kg(min)

Ordering Code:

AH4202FP-2xNP
① ②

① Part No.

② Pin No.

Circuits	A	B	C	D	E
2x1		36	25	13.4	8.7
2x2	4.2	40.2	29.2	17.60	12.9
2x3	8.4	44.4	33.4	21.80	17.10
2x4	12.6	48.6	37.6	26.00	21.3
2x5	16.8	52.80	41.8	30.2	25.5
2x6	21.00	57.0	46	34.4	29.7
2x7	25.2	61.2	50.2	33.6	33.9
2x8	29.4	65.4	54.4	42.8	38.1
2x9	33.60	69.6	58.6	47	42.3
2x10	37.80	73.8	62.8	51.2	46.5
2x11	42.00	78.00	67.00	55.4	50.7
2x12	46.20	82.20	71.20	59.6	54.9

Unless Otherwise specified tolerance
X.±0.35 X.XX:±0.20
X.X:±0.25 X.XXX:±0.15

SCALE: As Shown | UNIT: mm
DRAW ZLA | DATE 07/07/2022
CHECK BobYang | DATE 07/07/2022

3rd ANGLE PROJECTION

Antenk® ANTENK ELECTRONICS CO,.LTD
Http://www.antenk.com
E-mail: sales@antenk.com

TITLE: MX4.2mm Dual Row Female Housing With Two Screw Post

DRAWING NO: AH4202FP-2xNP

PRODUCT NO: AH4202FP-2xNP

REV	DESCRIPTION	DATE